Enphase M215 Inverter on a TPM Rack

Installation Guidelines

This supplement covers how to attach an Enphase M215 Microinverter (Inverter) to the Rails of a TPM (Top-of-Pole-Mount) rack. For detailed information on installing the M215 Inverter; including cabling etc., refer to the Enphase publication titled “M215 Microinverter Quick Install Guide” or other relevant Enphase publications.

Attaching the Microinverter to the Rails

The Inverter attaches to the Rails using 5/16" hardware. Attach the Inverter to the Rail at the approximate centers of the PV Modules. (See Figure 1)

A. Mark and then drill a 11/32" hole through the Rail where the Inverter will be attached. (See Figure 2)

B. Attach the Inverter to the Rail and tighten securely. (See Figure 3)

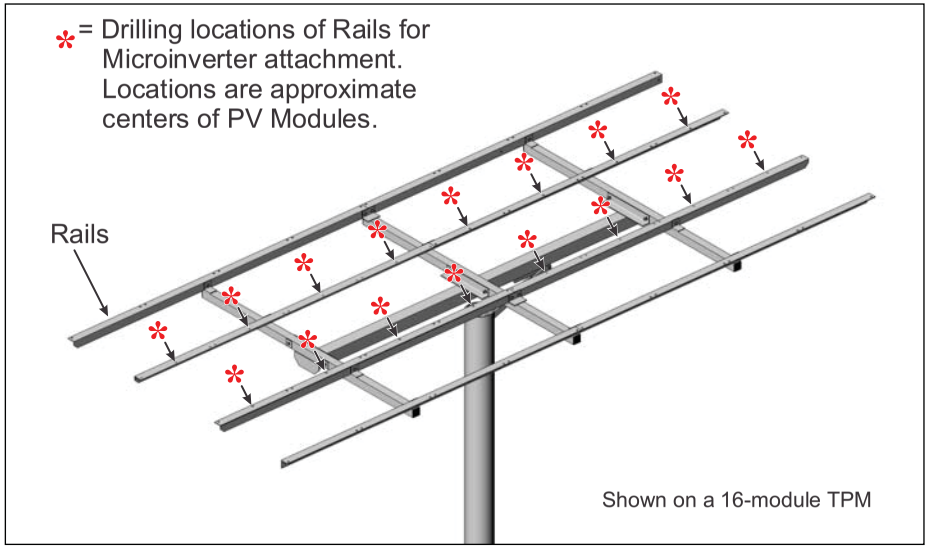

Figure 1: Rail Drilling Locations

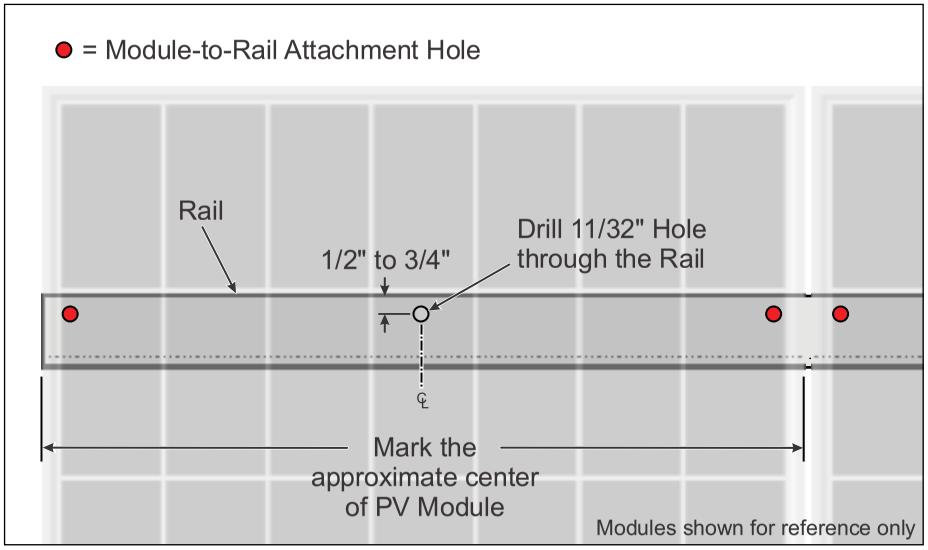

Figure 2: Measure, Mark, and Drill

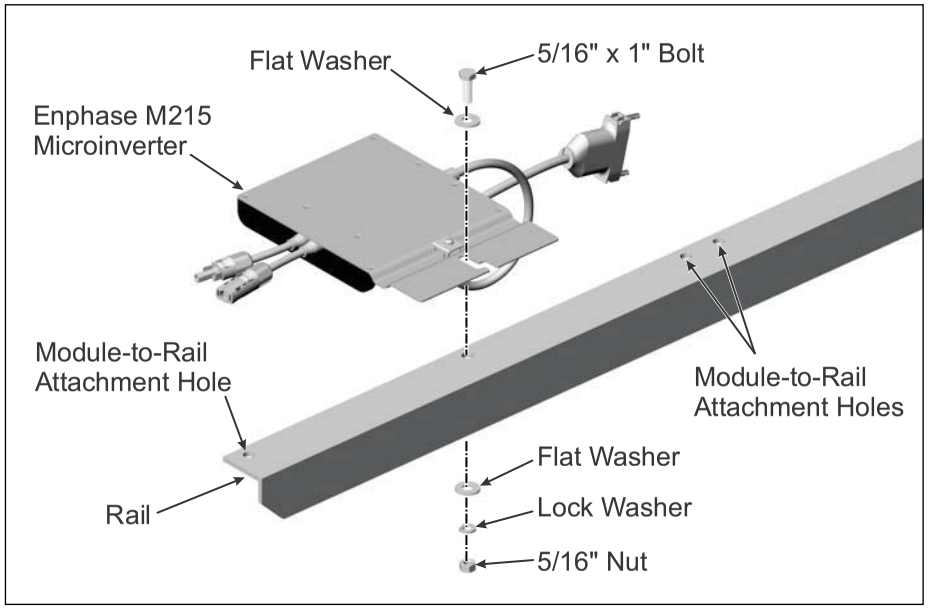

Figure 3: Attaching Microinverter to Rail

© 2013 Preformed Line Products PCN 051712-1 Version 1, Rev A

4000-B Vassar Drive NE, Albuquerque, New Mexico 87107 USA
Telephone: 800.260.3792 Fax: 505.889.3548 Web Site: www.DPWSolar.com E-mail: info@power-fab.com